АЗТЭО
Первое Представительство Солнца

Digital indicator for panel mounting
Model DI30

Applications

- Plant construction
- Machine tools
- Test benches
- Level measurement
- General industrial applications

Special features

- Freely-selectable input: 4 ... 20 mA, 0 ... 20 mA, DC 0 ... 5 V, DC 0 ... 10 V
- Transmitter power supply DC 24 V
- Minimum and maximum value memory
- 2 freely-programmable alarm outputs
- Linearisation with up to 10 programmable points

Digital indicator model DI30

Description

The DI30 digital indicator has been developed specifically for the display of measured values from electronic transmitters, such as pressure transmitters and temperature transmitters. It offers various input configurations for 0/4 ... 20 mA, DC 0 ... 5 V and DC 0 ... 10 V standard signals, which can be selected through the terminal configuration and input selection within the instrument configuration.
Thus, as an alternative, transmitters with current or voltage signals can be connected on the same instrument.
Using the transmitter power supply, current loop sensors (2-wire) as well as 3-wire and 4-wire sensors can be operated. The transmitter power supply is galvanically-isolated from the measuring input.
Two alarm outputs are available.

In addition, the indicator offers the possibility for sensor calibration and linearisation of up to 10 points. This makes further adaptation to different sensor signals and application requirements possible.

The standard features are completed with the adjustable sampling and display rates, and the input offset, for correcting zero offsets and sensor drift. Similarly, functions such as HOLD and TARE are included. Unauthorised alteration of the set instrument parameters can be prevented via different user levels, in conjunction with a freely-selectable access code.

All configuration and programming can be carried out through the front-panel keys.

WIKA
Part of your business

Specifications	Model DI30
Display	
■ Principle	7-segment LED
■ Display	4-digit, red
■ Character size	20 mm
■ Indication range	-999 ... 9999
■ Display rate	0.1 ... 10.0 s
Scale setting	via individual program numbers Initial and final values freely adjustable between -999 and +9999 adjustable decimal point
Input	
■ Number and type	1 input for standard signals
■ Input signal	4 ... 20 mA, input resistance ≤ 100 Ω or 0 ... 20 mA, input resistance ≤ 100 Ω or DC 0 ... 5 V, input resistance ≥ 150 kΩ or DC 0 ... 10 V, input resistance ≥ 150 kΩ
■ Input configuration	selectable via terminal configuration and programming
■ Accuracy	± 0.1 % of the measuring span ± 1 digit
■ Measuring time	0.1 ... 10.0 s
Alarm outputs	
■ Number and type	2 independent switch contacts (relay), freely-programmable
■ Relay contact	Load: AC 230 V, 5 A (resistive load) DC 30 V, 5 A (resistive load)
Memory	EEPROM parameter memory
■ Data preservation	> 20 years
Transmitter power supply	DC 24 V, max. 50 mA, galvanically isolated
Power supply	AC 230 V, 50/60 Hz, ± 10 % {AC 115 V, 50/60 Hz, ± 10 %}
■ Power consumption	max. 8 VA
Electrical connection	removable screw terminals
■ Wire cross-section	2.5 mm^2
Permissible ambient conditions	
■ Operating temperature	0 ... 60 °C
■ Storage temperature	-20 ... +80 °C
■ Humidity	relative humidity ≤ 75 %, non-condensing
CE conformity	
■ EMC directive	2004/108/EC, EN 61326-1 Emission (Group 1, Class B) and Immunity (industrial locations)
■ Low voltage directive	2006/95/EC, EN 61010-1
Case	
■ Material	Aluminium
■ Colour	black
■ Ingress protection	Front: IP 54; Rear: IP 00 (per IEC 60529 / EN 60529)
■ Weight	approx. 530 g
■ Mounting clearance	horizontal 120 mm / vertical 120 mm (recommended)
■ Mounting	sliding fasteners, fixed via screws, for panel thicknesses from 1 mm to 10 mm
■ Dimensions	96 x 96 x 71 mm

{} Items in curved brackets are optional extras for an additional price.

Display and operating elements

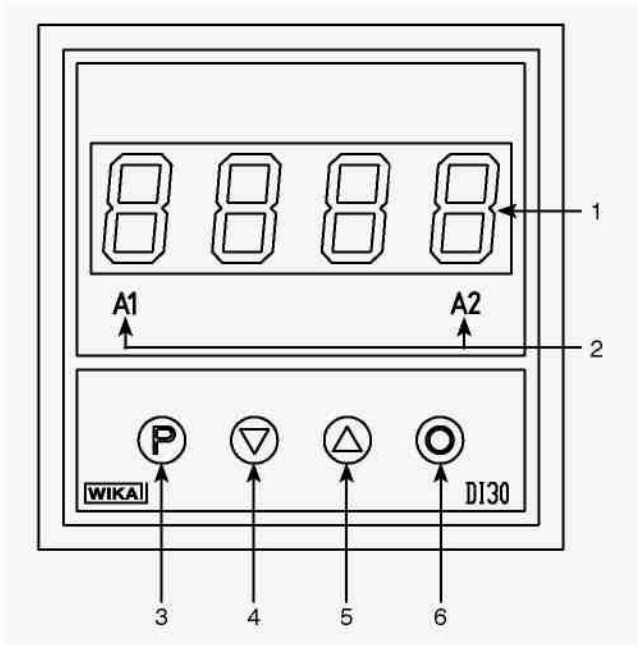

1 7-segment display
2 Switchpoint display 1 and 2 (Alarm 1 and Alarm 2)
3 Program key [**P**]
4 Down key [**DOWN**]
5 Up key [**UP**]
6 Zero key

Designation of terminal connectors

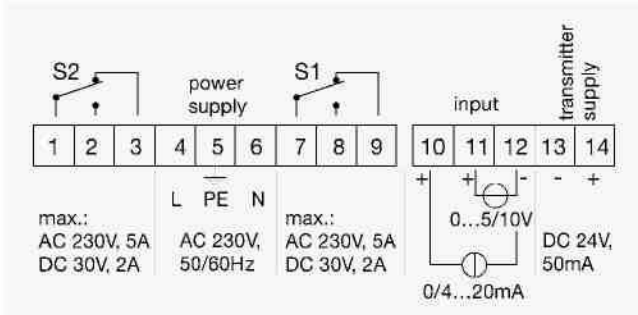

9-pin terminal block

Screw terminal for the power supply and alarm contacts.

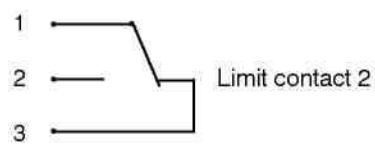

4 AC 230 V 50/60 Hz (connection L)
5 Protective conductor (connection PE)
6 AC 230 V 50/60 Hz (connection N)

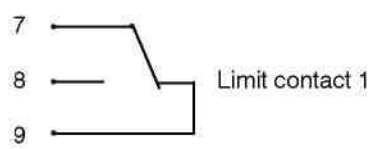

5-pin terminal block

Screw terminal for signal input and transmitter power supply.

10	$+ I_{in}$	Current measuring signal
11	$+ U_{in}$	Voltage measuring signal
12	$- I_{in}$	Current measuring signal
	$- U_{in}$	Voltage measuring signal
13	- GND	Ground for the transmitter power supply
14	+24 V	Transmitter power supply

Dimensions in mm

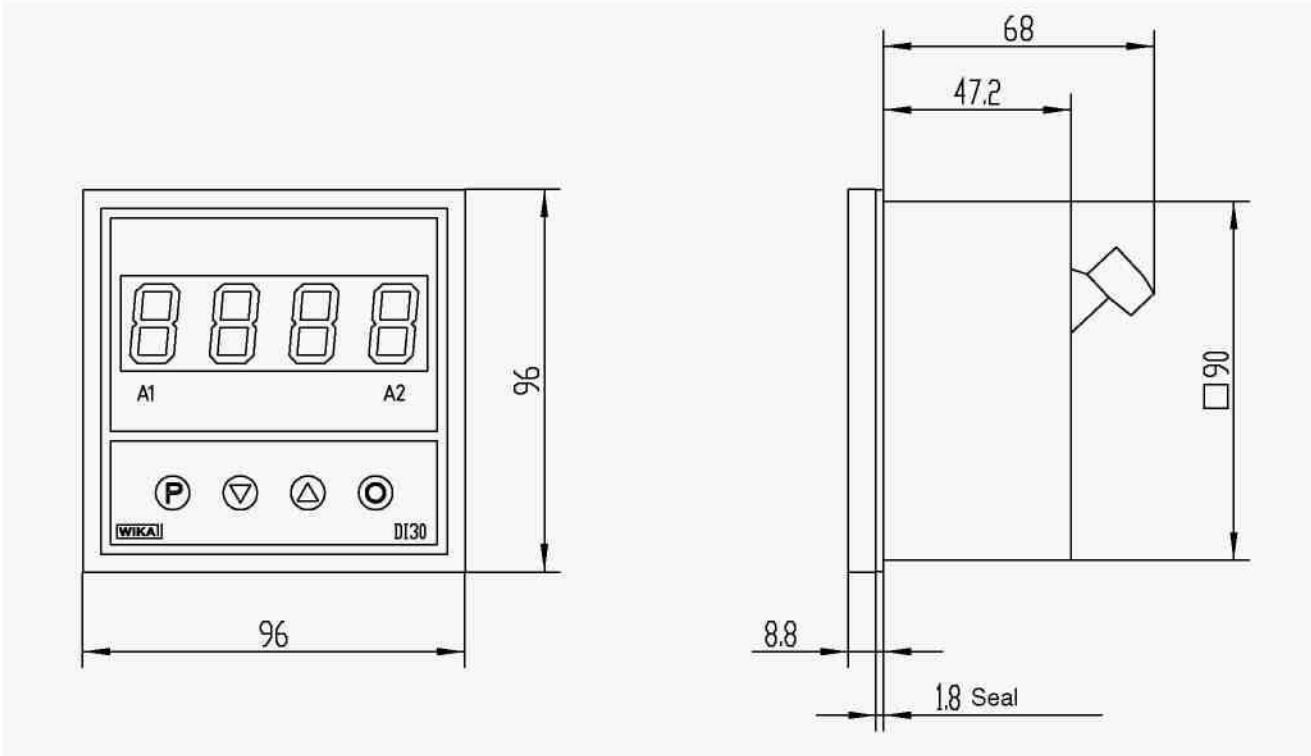

Panel cutout in mm

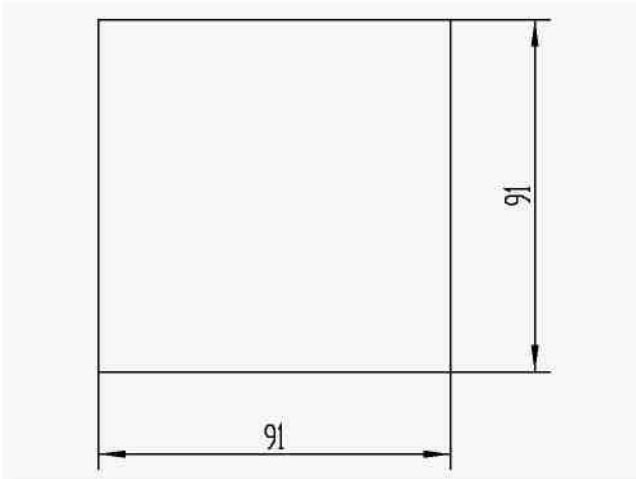

© 2005 WIKA Alexander Wiegand SE & Co. KG, all rights reserved.
The specifications given in this document represent the state of engineering at the time of publishing.
We reserve the right to make modifications to the specifications and materials.

03/2011 GB

ООО ТД «АЗТЭО»
624260, Россия Свердловская область,
г. Асбест, пр. Ленина, 8/3
Тел: 8 (34365) 2-87-74, 2-45-52
Факс:8 (34365) 2-87-74
E-mail: zakaz@azteo.ru