АЗТЭО
Первое Представительство Солнца

Bourdon tube pressure gauge with electrical output signal
Plastic case, ingress protection IP 41
Model PGT10

intelliGAUGE®

Applications

- General machine building

Special features

- Non-contact sensor (wear-free)
- Nominal size 40, 50
- Scale ranges 0 ... 1.6 bar to 0 ... 400 bar
- Different output signals

Bourdon tube pressure gauge model PGT10

Description

Design
EN 837-1

Nominal size in mm
40, 50

Accuracy class
2.5

Scale ranges
0 ... 1.6 to 0 ... 400 bar
or all other equivalent vacuum or combined pressure and vacuum ranges

Pressure limitation
Steady: 3/4 x full scale value
Fluctuating: 2/3 x full scale value
Short time: Full scale value

Permissible temperature
Ambient: -20 ... +60 °C
Medium: +60 °C maximum

Temperature effect
When the temperature of the measuring system deviates from the reference temperature (+20 °C): max. ±0.4 %/10 K of the span

Process connection
Cu-alloy,
lower mount (LM) or centre back mount (CBM)
G 1/4 B (male), 14 mm flats

Pressure element
Cu-alloy, C-type

Movement
Cu-alloy

Dial
Plastic, white, black lettering

Pointer
Plastic, black

Data sheets showing similar products:
intelliGAUGE, standard version, plug outlet; model PGT01; see data sheet PV 11.01
intelliGAUGE, standard version, cable outlet; model PGT02; see data sheet PV 11.02

WIKA
Part of your business

Case
Plastic

Window
Plastic, crystal-clear (PC)

Ingress protection
IP 41 per EN 60529 / IEC 529

Electronics

Output signal (275° indication angle)
With Us = DC 5 V, ratiometric:
0.5 ... 2.5 V, 0.5 ... 3.5 V or 0.5 ... 4.5 V
With Us = DC 12 ... 32 V, not ratiometric:
0.5 ... 2.5 V, 0.5 ... 3.5 V or 0.5 ... 4.5 V or
4 ... 20 mA, 2-wire

Supply voltage (Us)
DC 5 V / DC 12 ... 32 V

Electrical connections
Cable outlet, standard length 2 m

Colour	2-wire	3-wire
red	U_B +	U_B +
black	GND	GND
orange	-	U_{SIG} +

Electromagnetic compatibility
Per test standards EN 61000-4-6 / EN 61000-4-3

Output signal and permissible load

Voltage output (3-wire):
R_A > 5 kΩ

Current output (2-wire)
4 ... 20 mA:
$R_A \leq (U_{SIG} - 10\ V) / 0.02\ A$ with
R_A in Ω and U_{SIG} in DC V

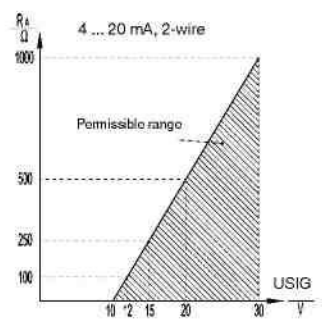

Options

- Other process connection (with adapter, Cu-alloy)
- Other cable length

Dimensions in mm

Standard version

Lower mount (LM)

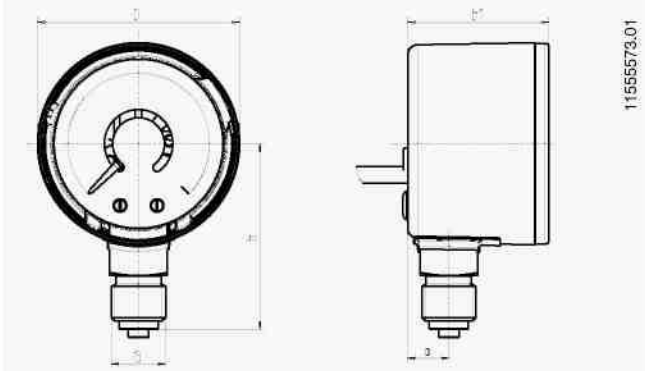

Centre back mount (CBM)

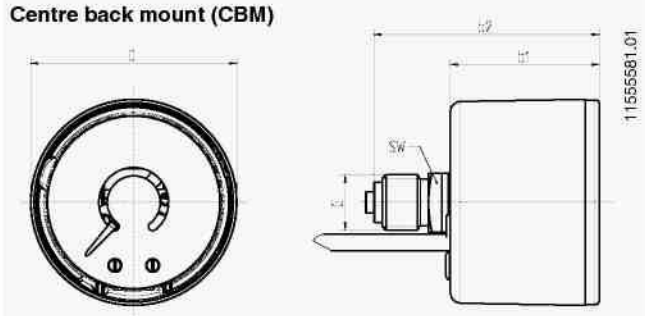

NS	Dimensions in mm							Weight in kg
	a	b_1	b_2	D	G	h	SW	
40	9	34.1	48.5	40	G 1/8 B	36	14	0.1
50	10	34.5	53.6	49	G 1/4 B	45	14	0.2

Process connection per EN 837-1 / 7.3

Ordering information
Model / Nominal size / Scale range / Connection size / Connection location / Output signal / Options

© 2010 WIKA Alexander Wiegand SE & Co. KG, all rights reserved.
The specifications given in this document represent the state of engineering at the time of publishing.
We reserve the right to make modifications to the specifications and materials.

08/2011 GB

ООО ТД «АЗТЭО»
624260, Россия Свердловская область,
г. Асбест, пр. Ленина, 8/3
Тел: 8 (34365) 2-87-74, 2-45-52
Факс:8 (34365) 2-87-74
E-mail: zakaz@azteo.ru