Bourdon tube pressure gauge with switch contact
Plastic case
Model PGS10

switchGAUGE

Applications

- Pressure gauge for indicating and monitoring the pressure in tanks and for signalling leaks
- General industrial applications

Special features

- High switching reliability and long service life
- Design per EN 837-1
- Pressure indication over 270 angular degrees
- Preset contact (adjustable between 10 and 90 % of the scale range)

Bourdon tube pressure gauge model PGS10

Description

Design
per EN 837-1

Nominal size in mm
40, 50

Accuracy class
2.5

Switch point tolerance
±4 % of full scale value factory-set

Scale ranges
0 ... 2.5 to 0 ... 400 bar

Pressure limitation
Steady: 3/4 x full scale value
Fluctuating: 2/3 x full scale value
Short time: Full scale value

Permissible temperature
Ambient: -20 … +60 °C
Medium: +60 °C maximum

Temperature effect
When the temperature of the measuring system deviates from the reference temperature (+20 °C):
max. ±0.4 %/10 K of the span

Process connection
Cu-alloy, male thread lower mount or centre back mount

Pressure element
Cu-alloy
≤ 100 bar: C-type
> 100 bar: Helical type

Movement
Cu-alloy

Dial
Aluminium, white

Pointer
Plastic, black

Data sheets showing similar products:
switchGAUGE, stainless steel case; model PGS11; see data sheet PV 21.01
switchGAUGE, stainless steel case; model PGS21; see data sheet PV 21.02

Part of your business

Case
Plastic

Window
Polycarbonate

Ingress protection
IP 41 per EN 60529 / IEC 529

Helium leak test
Leak rate 10^{-5} mbar*l/s

Electrical data
Switching voltage: DC / AC 4.5 ... 24 V
Switching current: 5 ... 100 mA
Contact load: max. 2.4 W
Switch contact: Normally closed (NC) or normally open (NO)

Index	Designation	Symbol	Switching function / setting direction	Code
1	Normally open (NO)	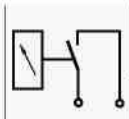	Contact makes with rising pressure or clockwise pointer motion (standard)	1
			Contact breaks with falling pressure or anticlockwise pointer motion	5
2	Normally closed (NC)	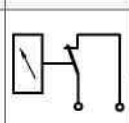	Contact breaks with rising pressure or clockwise pointer motion (standard)	2
			Contact makes with falling pressure or anticlockwise pointer motion	4

Contact setting: To customer requirements (if not specified, to mean value of the scale range)
Contact adjustment: Adjustable between 10 and 90 % of the scale range
Potential-free

Electrical connection
Cable outlet, standard length 2 m

Options

- Other process connection
- Other scale ranges
- Other cable length

Dimensions in mm

Standard version

Lower mount (LM)

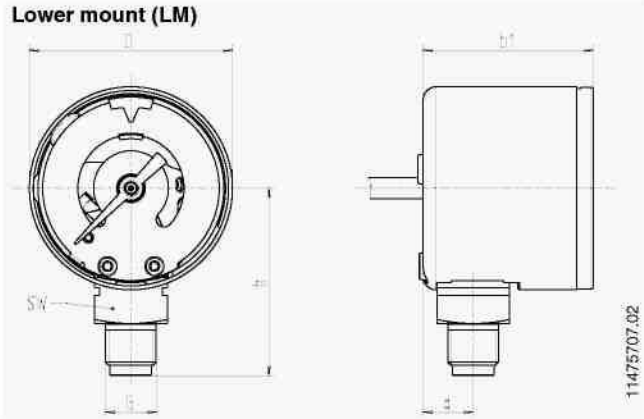

Centre back mount (CBM)

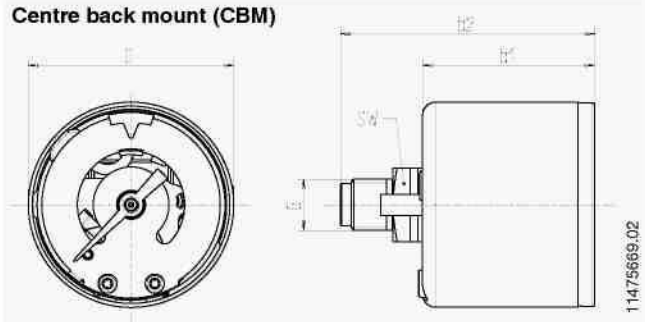

NS	Connection location	Dimensions in mm							Weight in kg
		D	a ±0.5	b_1 ±0.5	b_2 ±1	h ±1	G	SW	
40	**lower mount (LM)**	40	9.5	34	-	36	G 1/8 B	14	0.07
40	**centre back mount (CBM)**	40	-	32.7	48.3	-	G 1/8 B	14	0.07
50	**lower mount (LM)**	49	10	32	-	47	G 1/4 B	14	0.10
50	**centre back mount (CBM)**	49	-	34	54	-	G 1/4 B	14	0.10

Process connection per EN 837-1 / 7.3

Ordering information
Model / Nominal size / Scale range / Connection size / Connection location / Switch point and function / Options

© 2009 WIKA Alexander Wiegand SE & Co. KG, all rights reserved.
The specifications given in this document represent the state of engineering at the time of publishing.
We reserve the right to make modifications to the specifications and materials.

02/2012 GB

ООО ТД «АЗТЭО»

624260, Россия Свердловская область,

г. Асбест, пр. Ленина, 8/3

Тел: 8 (34365) 2-87-74, 2-45-52

Факс:8 (34365) 2-87-74

E-mail: zakaz@azteo.ru