Compact pressure switch
IP 65, for high pressure ranges
Model PCS-HP

Applications

- Pressure monitoring and direct switching of electrical loads
- For measuring points with limited space
- For gaseous and liquid, aggressive and highly viscous or contaminated media, also in aggressive ambience
- Process industry: chemical/petro-chemical, on- and offshore, technical gases, environmental technology, machine building and general plant construction, water treatment, pharmaceutical industry

Compact pressure switch model PCS-HP

Special features

- Ingress protection IP 65, NEMA 4
- Ambient temperature -40 ... +85 °C
- 1 switch point, SPDT or DPDT with a high contact rating of up to 15 A / AC 220 V
- Setting ranges up to 600 bar, max. test pressure up to 700 bar

Description

These high-quality pressure switches have been specifically developed for safety-critical applications with limited space. High quality and product manufacturing to ISO 9001:2000 ensures reliable monitoring of your plant. In production, the switches are traced by quality assurance software at every step and subsequently are 100 % tested.
The gauge adapters are made of stainless steel, the diaphragm is, depending on the measuring range and the sensor code, made of Inconel or coated with NBR or PTFE. Each switch family is available in IP 65, Ex-ia or Ex-d versions (Ex-ia see model PCA-HP, data sheet PV 33.33).

In order to ensure as flexible operation as possible, the pressure switches are equipped with micro switches, which make it possible to switch an electrical load of up to 15 A / AC 220 V directly. For smaller contact ratings, such as for PLC applications, argon gas filled micro switches with gold-plated contacts can be selected as an option. For two separate circuits the switches are also available in the version DPDT (double change-over contact).

By using a diaphragm with an antagonist spring, the model PCS-HP pressure switch is extremely robust and guarantees optimal operating characteristics.

Data sheets showing similar products:
Compact pressure switch, ignition protection type EEx-ia; model PCS; see data sheet PV 33.30
Compact pressure switch, ignition protection type EEx-d; model PCA; see data sheet PV 33.31
Compact pressure switch, for high pressure, ignition protection type EEx-d; model PCA-HP; see data sheet PV 33.33

Standard version

Case
Aluminium, epoxy resin coated,
case cover with screw-type cover, due to anti-twist device secured against unauthorised intervention

Ingress protection
IP 65 per EN 60529 / IEC 529

Permissible temperature
Ambient: -40 ... +85 °C
Medium:
Sensor code P (with FPM O-ring): 0 ... +250 °C
Sensor code P (with NBR O-ring): -10 ... +110 °C
Sensor code G: -40 ... +140 °C

Process connection
Stainless steel, lower mount (LM)
¼ NPT (female)

Measuring system
Sensor code P: Piston system
Sensor code G: Diaphragm with antagonist spring

Wetted parts

Sensor code	Measuring system
P	Stainless steel 316, sealing FPM [1]
G	Hastelloy C276

1) Option with sealing NBR

Switch contacts

Code	Type	Design	Electrical rating (resistive load) [4]	
			AC	DC
1	SPDT	**Silver contacts**	15 A, 220 V	2 A, 24 V 0.5 A, 125 V 0.25 A, 220 V
2 [3]	DPDT	**Silver contacts**	5 A, 220 V	0.5 A, 24 V
3	SPDT	**Silver contacts** inert gas filled T_{amb}: -30 ... +70 °C	15 A, 220 V	2 A, 24 V 0.5 A, 220 V
4 [3]	DPDT	**Silver contacts** hermetically sealed in air	5 A, 220 V	0.5 A, 24 V
5	SPDT	**Gold-plated contacts** inert gas filled T_{amb}: -30 ... +70 °C	1 A, 220 V	0.5 A, 24 V

3) Simultaneous triggering within 2% of span
4) Only the underlined data are shown on the product label

Repeatability
≤ 1 % of span

Setting ranges, max. test pressure, max. switch hysteresis

Sensor code	Setting range in bar	Working range in bar	Max. test pressure in bar	Max. switch hysteresis		
				Contact code 1, 3 and 5	Contact code 2	Contact code 4
P, G	**8 ... 40**	0 ... 100	400	2 bar	4 bar	16 bar
P, G	**16 ... 100**	0 ... 250	400	5 bar	5 bar	20 bar
P, G	**40 ... 250**	0 ... 400	600	12 bar	20 bar	80 bar
P, G	**80 ... 400**	0 ... 600	600	20 bar	20 bar	80 bar
P, G	**100 ... 600**	0 ... 600	700	30 bar	30 bar	120 bar

Switch points
The switch points can be set to your requirements, free-of-charge.
Please specify:
Switch point, switching direction (e.g. switch point 1: 0.5 bar, falling)

After unscrewing the case cover, **switch point adjustment** can be made using the adjustment screw. The switch point is settable within the entire measuring range with **the following general rule**:

- Define the value A = 2x repeatability + switch hysteresis
- If the pressure is rising, the switch point should be set between (min. + value A) up to max. of the setting range.
- If the pressure is falling, the switch point should be set between min. up to (max. - value A) of the setting range.

Example:
Setting range: 0 ... 1 bar with one switch contact
Repeatability: 1 % of 1 bar = 10 mbar
Switch hysteresis = 15 mbar (see table setting ranges)
Value A = 2 x 10 mbar + 15 mbar = 35 mbar
If the pressure is rising, the switch point should be set between 35 mbar up to 1 bar.
If the pressure is falling, the switch point should be set between 0 up to 965 mbar.
For optimal performance we suggest the switch point lies between 25 % and 75 % of the setting range.

Electrical connection
½ NPT female, cable connection using internal terminal block, ground connection using internal and external screw, max. ground cable cross-section 4 mm2

Pressure switch certified per:

- Pressure equipment directive 97/23/EC (PED, annex 1, category IV, safety accessories, module B + D)
- Low voltage directive 73/23 EEC and 93/68 EEC

Dielectric strength
Safety class I (EN 61298-2: 1997-06)

Mounting
Direct or wall mounting
Preferred connection location of the process connection should be below. Alternatively the instrument can be installed so that access to internals is from front of the enclosure and the electrical connection is placed on side.

Weight
approx. 1.0 kg

Options

- Other process connection, also with adapter
- Case made of stainless steel 316
- Electrical connection 3/4 NPT, G 1/2 or M20 x 1.5 (female)
- Cable gland on request
- 2" pipe-mounting kit (with clamping element)
- Version for off-shore [5] or tropicalised application [5]
- Version for applications to NACE [5] [6]
- Version for ammonia applications [5]
- Oil and grease free version for oxygen applications
- Version to
  GAS Ex-ia DUST Ex-iaD Gr. II Cat. 1 GD [5]
  Electrical characteristics: Ui = 30 V
  Ii = 100 mA
  Pi = 0.75 W
  Ci = 0 µF
  Li = 0 mH
- Accessories:
  - Pressure gauge valves model 910.11, see data sheet AC 09.02
  - Barstock valves model 910.81, see data sheet AC 09.18

5) Inert gas filled contacts required
6) Only in connection with sensor code G

Approvals and certificates

- SIL 2 version [5]
- GOST-R certificate
- Test certificate *CA* (confirmation of the switching accuracy)
- Test report *CP* (3-time listing of the switch point, requires switch point specification)
- Material certificate 3.1 per EN 10204

Dimensions in mm

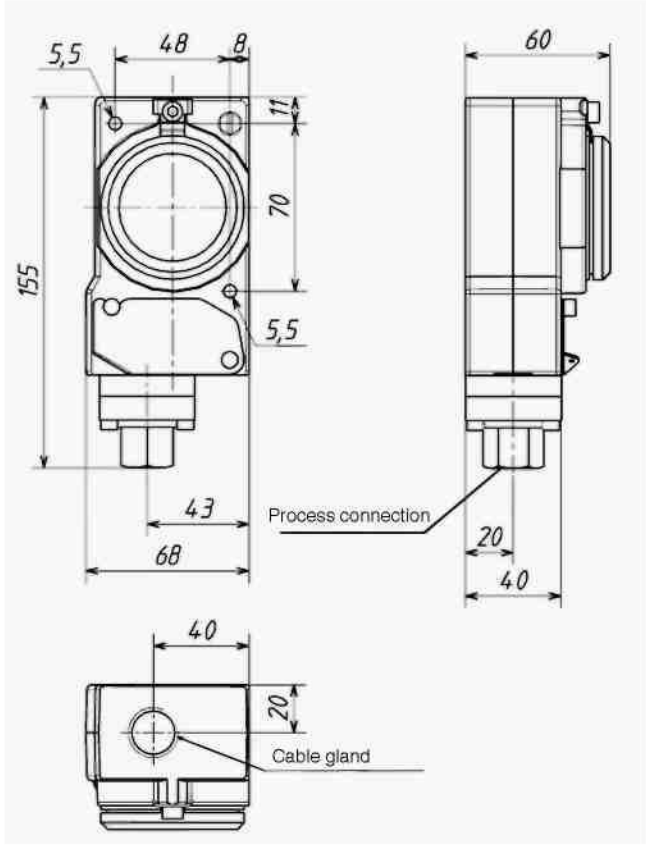

Ordering information

Model / Case / Sensor code / Switch contacts with version / Setting range / Process connection / Electrical connection / Switch point / Switching direction / Options

Example: PCS 2 P1 - 8/40 bar - 1/4"NPT-F - 1/2"NPT-F

© 2010 WIKA Alexander Wiegand SE & Co. KG, all rights reserved.
The specifications given in this document represent the state of engineering at the time of publishing.
We reserve the right to make modifications to the specifications and materials.

ООО ТД «АЗТЭО»
624260, Россия Свердловская область,
г. Асбест, пр. Ленина, 8/3
Тел: 8 (34365) 2-87-74, 2-45-52
Факс:8 (34365) 2-87-74
E-mail: zakaz@azteo.ru