АЗТЭО
Первое Представительство Солнца

# Bourdon tube pressure gauge
# Model 111.11, welding gauge to ISO 5171



for further approvals
see page 2

## Applications

- For equipment and plants for welding, cutting and allied processes

## Special features

- Design per ISO 5171
- Pressure relief in case back
- Reliable and cost-effective

**Bourdon tube pressure gauge model 111.11**

## Description

**Design**
ISO 5171

**Nominal size in mm**
40, 50, 63

**Accuracy class**
2.5

**Scale ranges**
Welding engineering standard ranges for oxygen and acetylene to ISO 5171, as well as 0 ... 1 to 0 ... 400 bar to EN 837-1

**Pressure limitation**
Steady: 3/4 x full scale value
Fluctuating: 2/3 x full scale value
Short time: Full scale value

**Permissible temperature**
Ambient: -20 ... +60 °C
Medium: +60 °C maximum

**Temperature effect**
When the temperature of the measuring system deviates from the reference temperature (+20 °C): max. ±0.4 %/10 K of the span



WIKA
Part of your business

## Standard version

**Process connection**
Copper alloy, lower mount (LM), with restrictor
NS 40: G 1/8 B (male), 14 mm flats
NS 50,63: G 1/4 B (male), 14 mm flats

**Pressure element**
Copper alloy (with acetylene, max. 70 % copper content), C-type or helical type

**Movement**
Copper alloy

**Dial**
Plastic, white, with pointer stop pin
Black lettering

**Pointer**
Plastic, black

## Dimensions in mm

**Standard version**

**Lower mount (LM)**

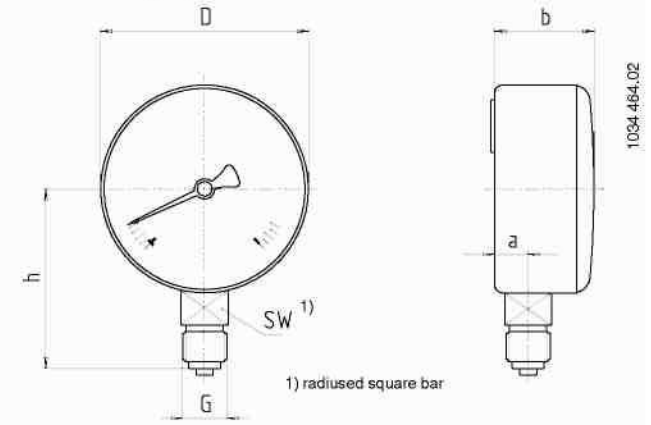


| NS | Dimensions in mm | | | | | | Weight in kg |
|---|---|---|---|---|---|---|---|
| | a | b | D | G | h ±1 | SW | |
| **40** | 9.5 | 26 | 39 | G ⅛ B | 36 | 14 | 0.09 |
| **50** | 9.5 | 28 | 49 | G ¼ B | 45 | 14 | 0.11 |
| **63** | 9.5 | 28 | 62 | G ¼ B | 53.5 | 14 | 0.15 |

Process connection per EN 837-1 / 7.3

**Ordering information**
Model / Nominal size / Scale range / Connection size / Options

**Case**
Steel, brass-coloured,
with pressure relief in case back

**Window**
Polycarbonate, snap-fitted in case

## Options

- Other process connection
- Sealings (model 910.17, see data sheet AC 09.08)
- Case brass or stainless steel
- Slip-on bezel
- Back mount (BM)
- Acetylene pressure gauge for pressure regulators for manifold systems per ISO 7291 (BAM tested)

## CE conformity

**Pressure equipment directive**
97/23/EC, PS > 200 bar, module A, pressure accessory

## Approvals

- **GOST**, metrology/measurement technology, Russia
- **GOST-R**, import certificate, Russia
- **CRN**, safety (e.g. electr. safety, overpressure, ...), Canada

## Certificates 1)

- 2.2 test report per EN 10204 (e.g. state-of-the-art manufacturing, material proof, indication accuracy)
- 3.1 inspection certificate per EN 10204 (e.g. indication accuracy)

1) Option

Approvals and certificates, see website

© 2010 WIKA Alexander Wiegand SE & Co. KG, all rights reserved.
The specifications given in this document represent the state of engineering at the time of publishing.
We reserve the right to make modifications to the specifications and materials.



ООО ТД «АЗТЭО»
624260, Россия Свердловская область,
г. Асбест, пр. Ленина, 8/3
Тел: 8 (34365) 2-87-74, 2-45-52
Факс:8 (34365) 2-87-74
E-mail: zakaz@azteo.ru